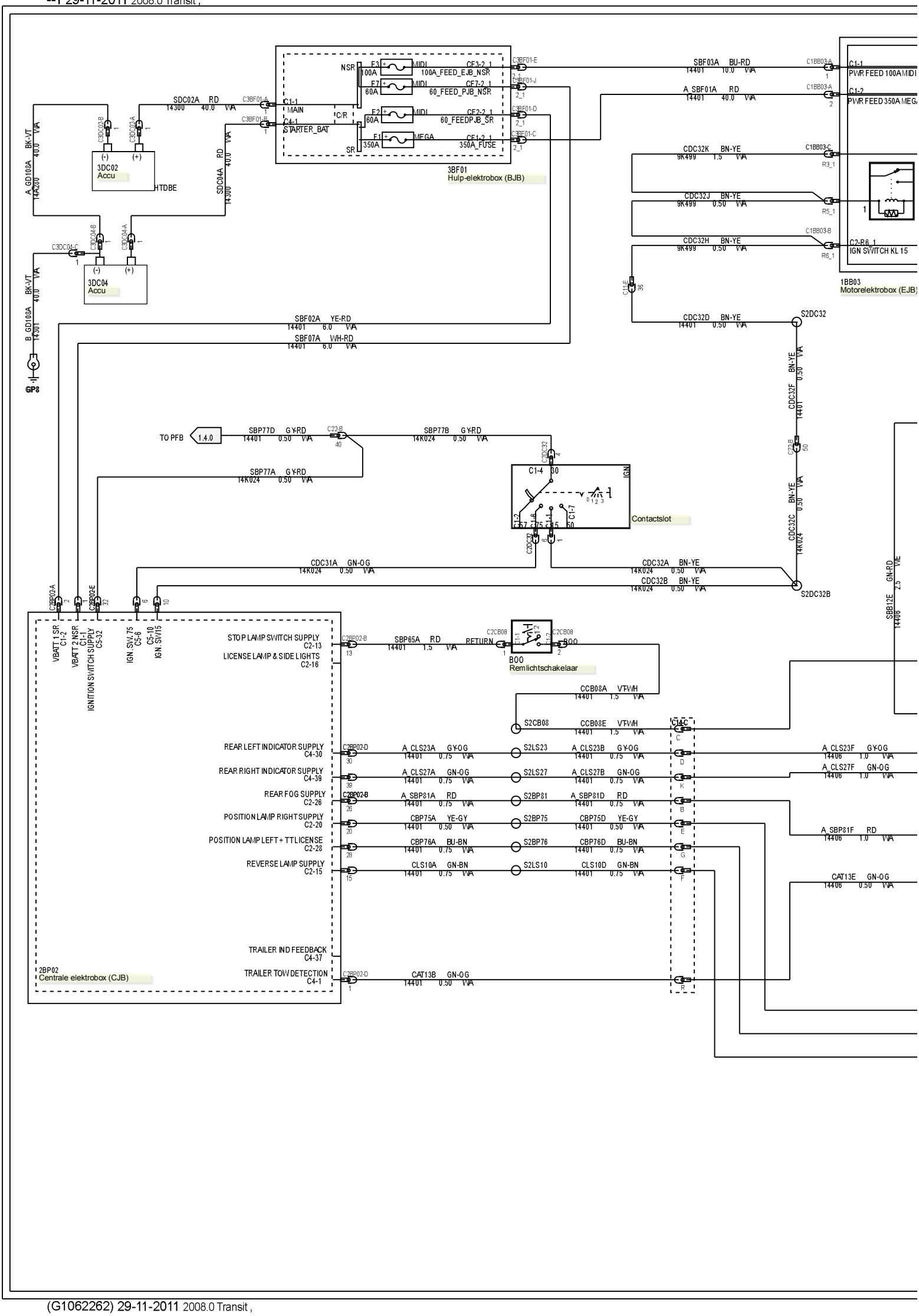
3BF01
Hulp-elektrobox (BJB)
NSR
SR
F3 100A MIDI 100A_FEED_EJB_NSR
F7 60A MIDI 60_FEED_PJB_NSR
F2 60A MIDI 60_FEEDPJB_SR
F1 350A MEGA 350A_FUSE
C1-1 MAIN
C4-1 STARTER_BAT
C/R
3DC02
Accu
HTDBE
3DC04
Accu
GP8
1BB03
Motorelektrobox (EJB)
PWR FEED 100A MIDI
PWR FEED 350A MEGA
IGN SWITCH KL 15
S2DC32
S2DC32B
Contactslot
TO PFB
1.4.0
Remlichtschakelaar
2BP02
Centrale elektrobox (CJB)
VBATT 1 SR C1-2
VBATT 2 NSR C1-1
IGNITION SWITCH SUPPLY C5-32
IGN. SW4.75 C5-6
IGN. SW15 C5-10
STOP LAMP SWITCH SUPPLY C2-13
LICENSE LAMP & SIDE LIGHTS C2-16
REAR LEFT INDICATOR SUPPLY C4-30
REAR RIGHT INDICATOR SUPPLY C4-39
REAR FOG SUPPLY C2-26
POSITION LAMP RIGHT SUPPLY C2-20
POSITION LAMP LEFT + TTLICENSE C2-28
REVERSE LAMP SUPPLY C2-15
TRAILER IND FEEDBACK C4-37
TRAILER TOW DETECTION C4-1

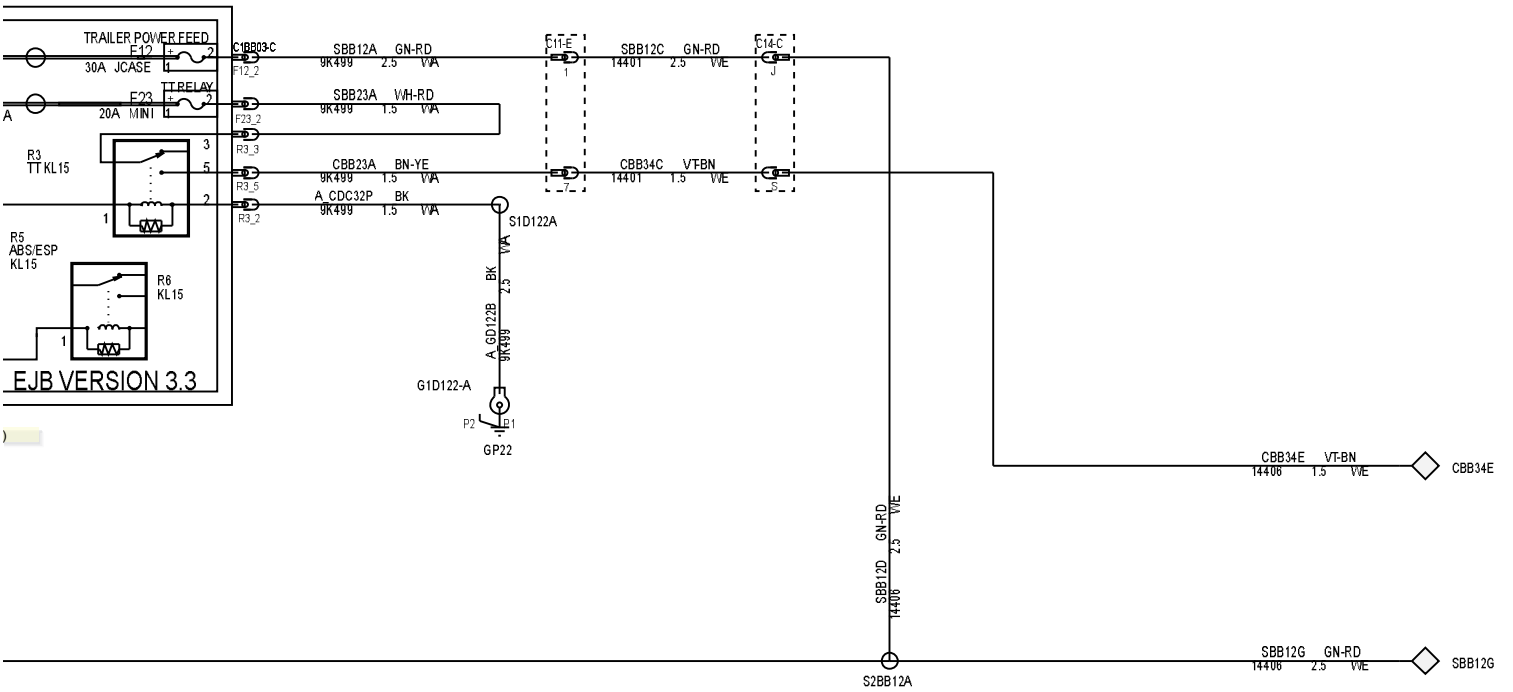
TRAILER POWER FEED
F12
30A JCASE
F23
20A MINI
TT RELAY
R3
TT KL15
R5
ABS/ESP
KL15
R6
KL15
EJB VERSION 3.3
SBB12A GN-RD 9K499 2.5 WE
SBB23A WH-RD 9K499 1.5 WA
CBB23A BN-YE 9K499 1.5 WA
A_CDC32P BK 9K499 1.5 WA
SBB12C GN-RD 14401 2.5 WE
CBB34C VT-BN 14401 1.5 WE
S1D122A
A_GD122B BK 9K499 2.5 WA
G1D122-A
GP22
CBB34E VT-BN 14406 1.5 WE
CBB34E
SBB12D GN-RD 14406 2.5 WE
SBB12G GN-RD 14406 2.5 WE
SBB12G
S2BB12A

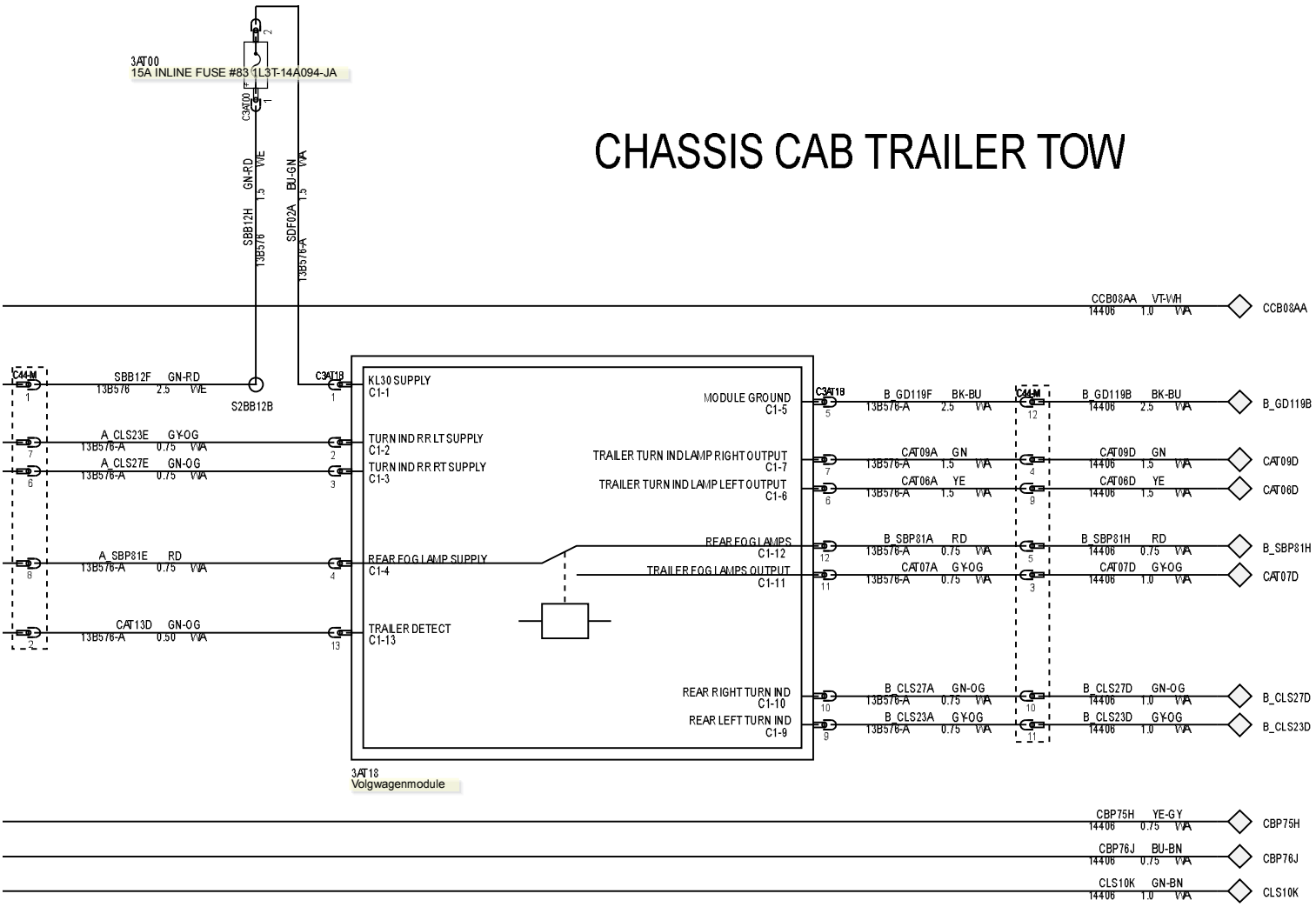
3AT00
15A INLINE FUSE #83 1L3T-14A094-JA
CHASSIS CAB TRAILER TOW
SBB12H GN-RD 13B576 1.5 WE
SDF02A BU-GN 13B576-A 1.3 WA
CCB08AA VT-WH 14406 1.0 WA
CCB08AA
SBB12F GN-RD 13B576 2.5 WE
S2BB12B
A_CLS23E GY-OG 13B576-A 0.75 WA
A_CLS27E GN-OG 13B576-A 0.75 WA
A_SBP81E RD 13B576-A 0.75 WA
CAT13D GN-OG 13B576-A 0.50 WA
KL30 SUPPLY C1-1
TURN IND RR LT SUPPLY C1-2
TURN IND RR RT SUPPLY C1-3
REAR FOG LAMP SUPPLY C1-4
TRAILER DETECT C1-13
MODULE GROUND C1-5
TRAILER TURN IND LAMP RIGHT OUTPUT C1-7
TRAILER TURN IND LAMP LEFT OUTPUT C1-6
REAR FOG LAMPS C1-12
TRAILER FOG LAMPS OUTPUT C1-11
REAR RIGHT TURN IND C1-10
REAR LEFT TURN IND C1-9
3AT18
Volgwagenmodule
B_GD119F BK-BU 13B576-A 2.5 WA
B_GD119B BK-BU 14406 2.5 WA
B_GD119B
CAT09A GN 13B576-A 1.5 WA
CAT09D GN 14406 1.5 WA
CAT09D
CAT06A YE 13B576-A 1.5 WA
CAT06D YE 14406 1.5 WA
CAT06D
B_SBP81A RD 13B576-A 0.75 WA
B_SBP81H RD 14406 0.75 WA
B_SBP81H
CAT07A GY-OG 13B576-A 0.75 WA
CAT07D GY-OG 14406 1.0 WA
CAT07D
B_CLS27A GN-OG 13B576-A 0.75 WA
B_CLS27D GN-OG 14406 1.0 WA
B_CLS27D
B_CLS23A GY-OG 13B576-A 0.75 WA
B_CLS23D GY-OG 14406 1.0 WA
B_CLS23D
CBP75H YE-GY 14406 0.75 WA
CBP75H
CBP76J BU-BN 14406 0.75 WA
CBP76J
CLS10K GN-BN 14406 1.0 WA
CLS10K

4LS35
Linker achterlicht

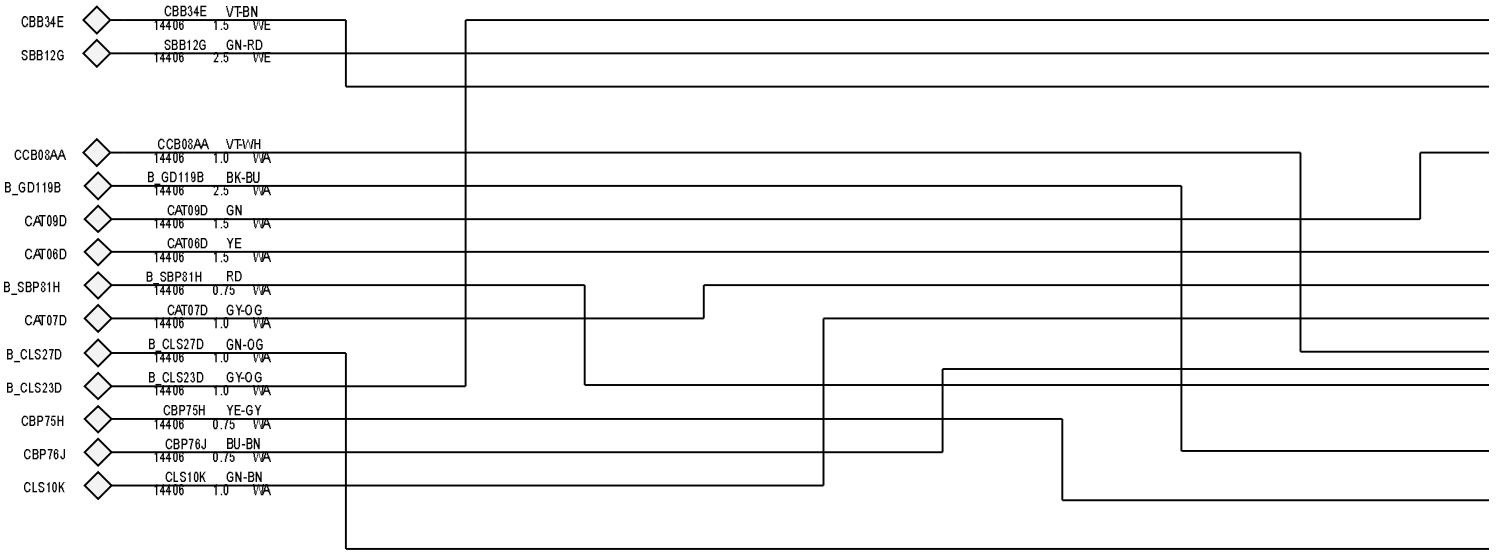

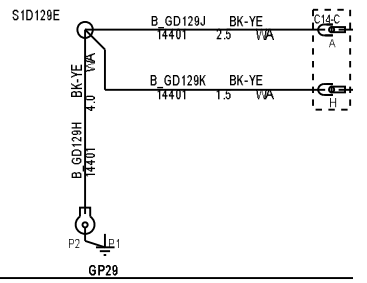

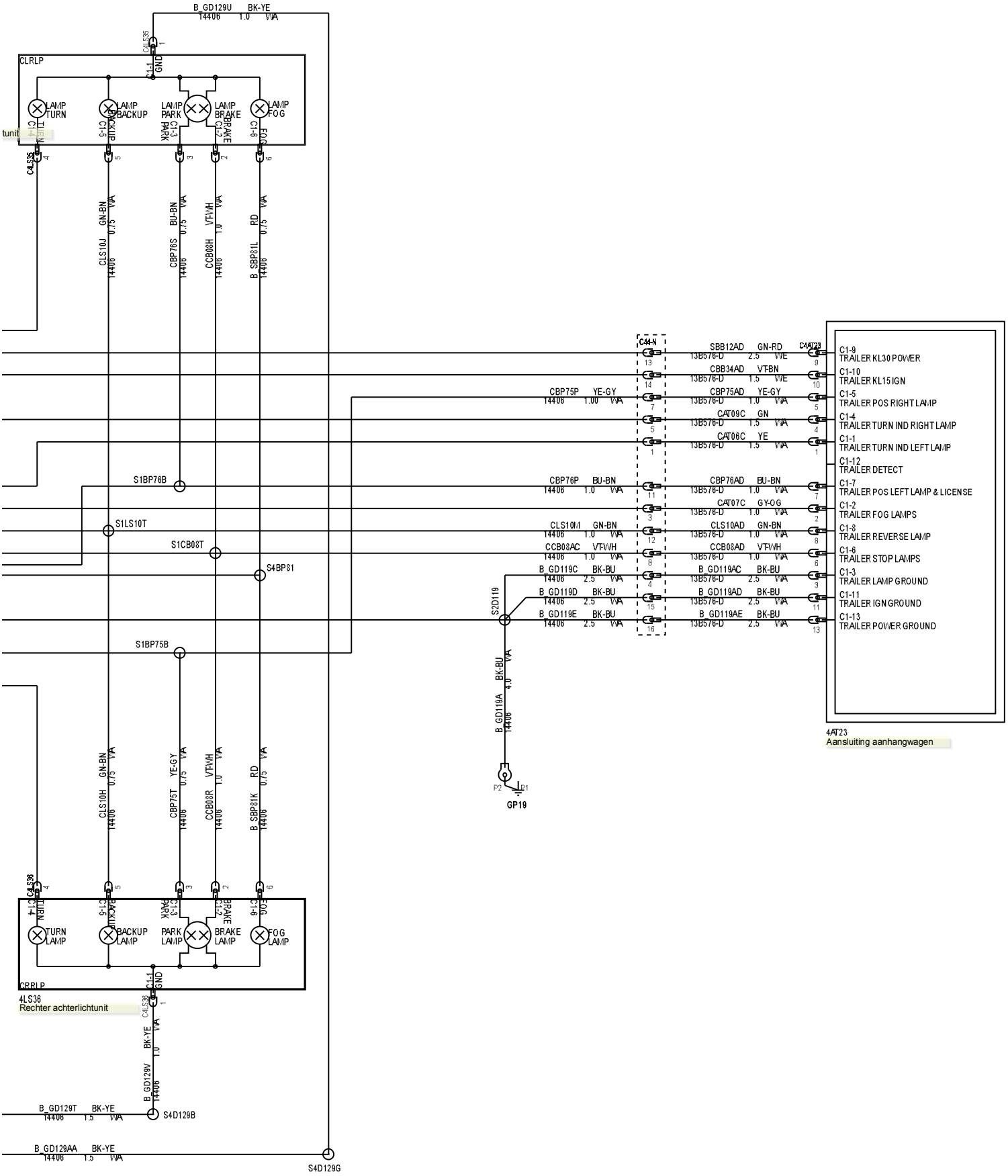
B_GD129U BK-YE
14406 1.0 VIA
C4LS35
CLRLP
C1-1 GND
LAMP TURN
LAMP BACKUP
LAMP PARK
LAMP BRAKE
LAMP FOG
C1-4 TURN
C1-5 BACKUP
C1-3 PARK
C1-2 BRAKE
C1-6 FOG
CLS10J GN-BN 0.75 VIA 14406
CBP76S BU-BN 0.75 VIA 14406
CCB08H VT-WH 1.0 VIA 14406
B_SBP81L RD 0.75 VIA 14406
S1BP76B
S1LS10T
S1CB08T
S4BP81
S1BP75B
CLS10H GN-BN 0.75 VIA 14406
CBP75T YE-GY 0.75 VIA 14406
CCB08R VT-WH 1.0 VIA 14406
B_SBP81K RD 0.75 VIA 14406
TURN LAMP
BACKUP LAMP
PARK LAMP
BRAKE LAMP
FOG LAMP
CRRLP
4LS36
Rechter achterlichtunit
B_GD129V BK-YE 1.0 VIA 14406
B_GD129T BK-YE 1.5 VIA 14406
S4D129B
B_GD129AA BK-YE 1.5 VIA 14406
S4D129G
C44-N
CBP75P YE-GY 1.00 VIA 14406
CBP76P BU-BN 1.0 VIA 14406
CLS10M GN-BN 1.0 VIA 14406
CCB08AC VT-WH 1.0 VIA 14406
B_GD119C BK-BU 2.5 VIA 14406
B_GD119D BK-BU 2.5 VIA 14406
B_GD119E BK-BU 2.5 VIA 14406
S2D119
B_GD119A BK-BU 4.0 VIA 14406
GP19
SBB12AD GN-RD 2.5 VIA 13B576-D
CBB34AD VT-BN 1.5 VIA 13B576-D
CBP75AD YE-GY 1.0 VIA 13B576-D
CAT09C GN 1.5 VIA 13B576-D
CAT06C YE 1.5 VIA 13B576-D
CBP76AD BU-BN 1.0 VIA 13B576-D
CAT07C GY-OG 1.0 VIA 13B576-D
CLS10AD GN-BN 1.0 VIA 13B576-D
CCB08AD VT-WH 1.0 VIA 13B576-D
B_GD119AC BK-BU 2.5 VIA 13B576-D
B_GD119AD BK-BU 2.5 VIA 13B576-D
B_GD119AE BK-BU 2.5 VIA 13B576-D
C4AT23
C1-9 TRAILER KL30 POWER
C1-10 TRAILER KL15 IGN
C1-5 TRAILER POS RIGHT LAMP
C1-4 TRAILER TURN IND RIGHT LAMP
C1-1 TRAILER TURN IND LEFT LAMP
C1-12 TRAILER DETECT
C1-7 TRAILER POS LEFT LAMP & LICENSE
C1-2 TRAILER FOG LAMPS
C1-8 TRAILER REVERSE LAMP
C1-6 TRAILER STOP LAMPS
C1-3 TRAILER LAMP GROUND
C1-11 TRAILER IGN GROUND
C1-13 TRAILER POWER GROUND
4AT23
Aansluiting aanhangwagen